THIS COPY IS PROVIDED ON A RESTRICTED BASIS AND IS NOT TO BE USED IN ANY WAY DETRIMENTAL TO THE INTERESTS OF PANDUIT CORP.

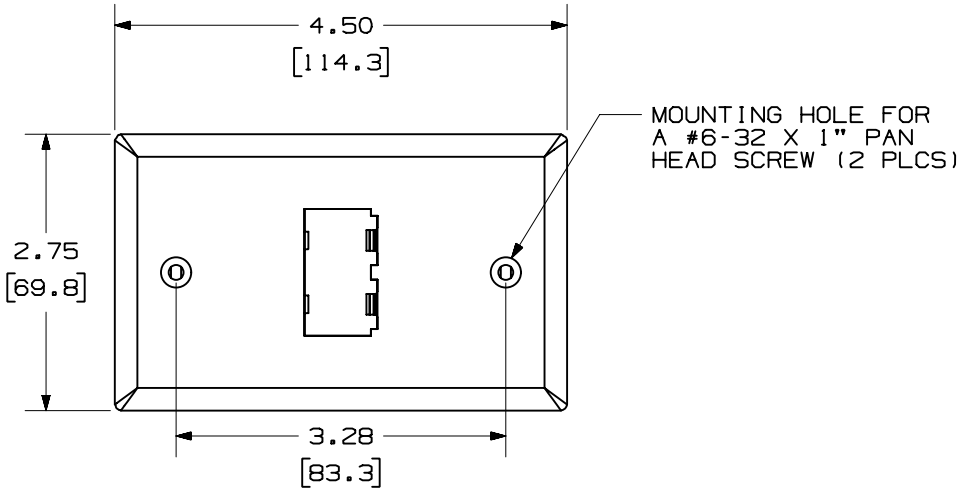

PANDUIT PART NO.	WEIGHT
CFP2**	.47 LB/10 PCS (212 G/10 PCS)

NOTES:

** 1. SEE CURRENT CATALOG FOR ADDITIONAL PART NUMBER SUFFIXES TO INDICATE COLOR AND OR PACKAGE QUANTITY.

2. TWO #6-32 X 1" LONG, SLOTTED PAN HEAD SCREWS WITH NON-THREADED LEAD POINT PROVIDED FOR FASTENING FACEPLATES.

3. DIMENSIONS IN PARENTHESES ARE IN METRIC.

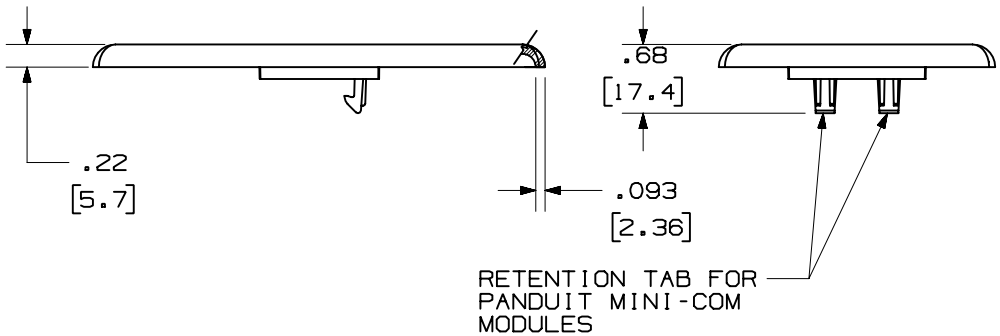

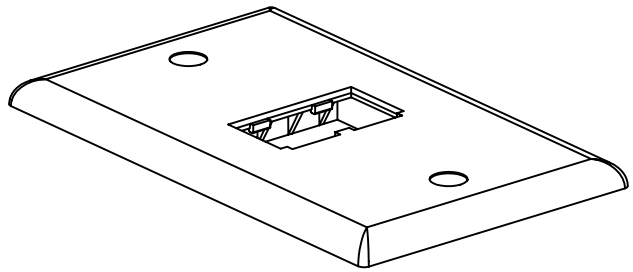

CAD FILENAME/LAYERS: D35544CP_DC_CFP2_00D.PRT

PANDUIT CORP. TINLEY PARK, ILLINOIS

A CLASSIC SERIES 2 POSITION VERTICAL FACEPLATE (CFP2**) B C

CUSTOMER DRAWING

REV	DATE	BY	CHK	DESCRIPTION	ECN - R		CUST	SUP
3	7-13-99	JsP		C. WAS "DESIGNER SERIES'.	35544-39			
2	9-17-97	JBA	CEF	B. REV'D P/N IN TITLE: WAS CFPH2**.	35544-39	CEF		
1	9-12-97	RCA	CEF	A. REV'D TITLE: WAS MINI-COM 2 POSITION STANDARD VERTICLA FACEPLATE.	35544-39	CEF		
R	4-3-97	RCA	HIW	RELEASED TO PRODUCTION	35544-39	HIW		

UNLESS OTHERWISE SPECIFIED, DIMENSIONAL TOLERANCES ARE:
(.X) ± (.XXX) ±.010(.3)
(.XX) ±.03(.8) ANGLES ±

UNLESS OTHERWISE SPECIFIED, ALL DIMENSIONS ARE GIVEN IN INCHES, THIRD ANGLE PROJECTION.

DRAWN BY: RCA
DATE: 4-3-97
CHK'D: HIW
MAT'L: ABS
SCALE: NONE
DRAWING NO.: 35544-39
DWG SIZE: A